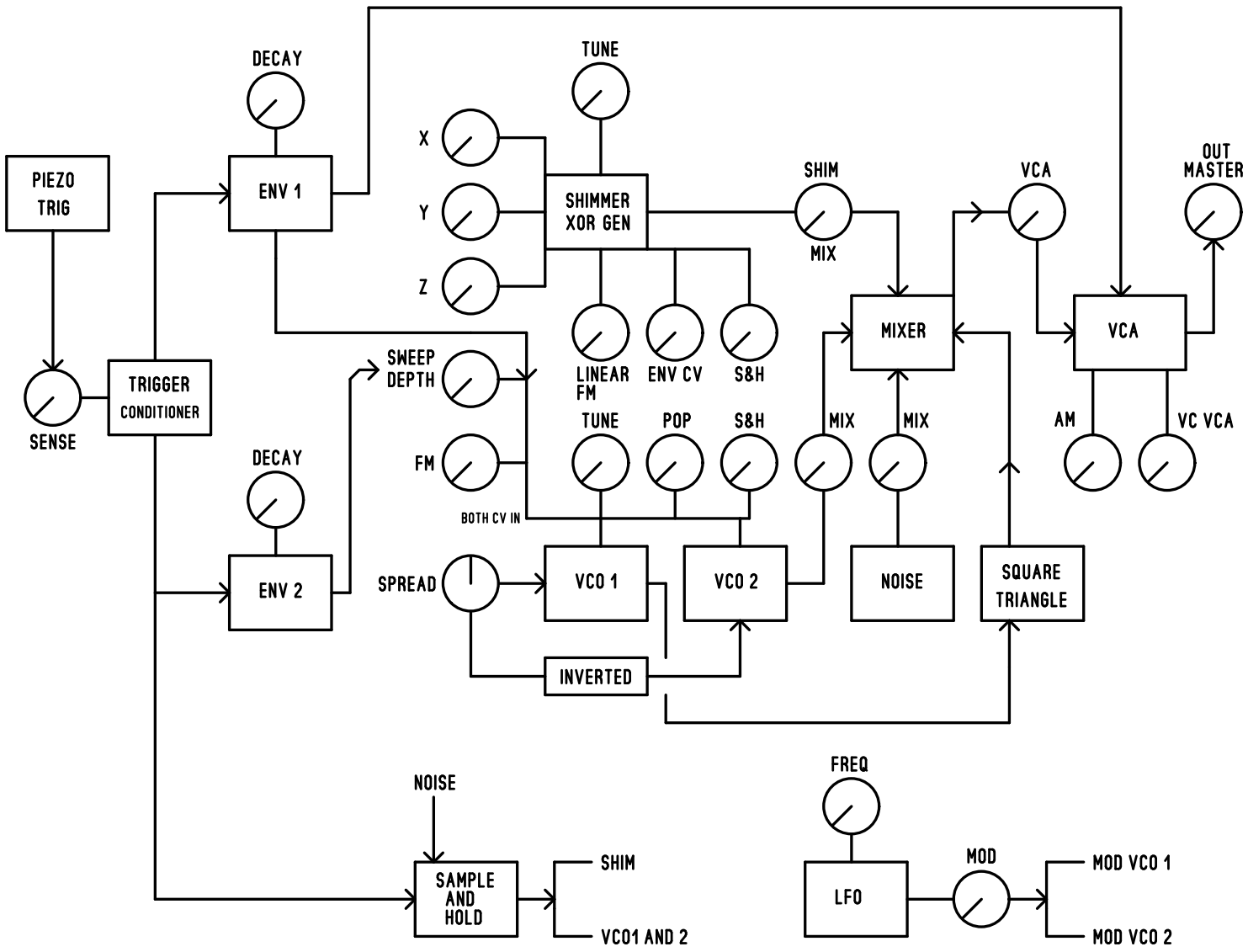
PIEZO TRIG
SENSE
TRIGGER CONDITIONER
DECAY
ENV 1
DECAY
ENV 2
TUNE
X
Y
Z
SHIMMER XOR GEN
LINEAR FM
ENV CV
S&H
SHIM
MIX
VCA
OUT MASTER
MIXER
VCA
SWEEP DEPTH
FM
BOTH CV IN
TUNE
POP
S&H
MIX
MIX
AM
VC VCA
SPREAD
VCO 1
VCO 2
NOISE
SQUARE TRIANGLE
INVERTED
NOISE
SAMPLE AND HOLD
SHIM
VCO1 AND 2
FREQ
LFO
MOD
MOD VCO 1
MOD VCO 2