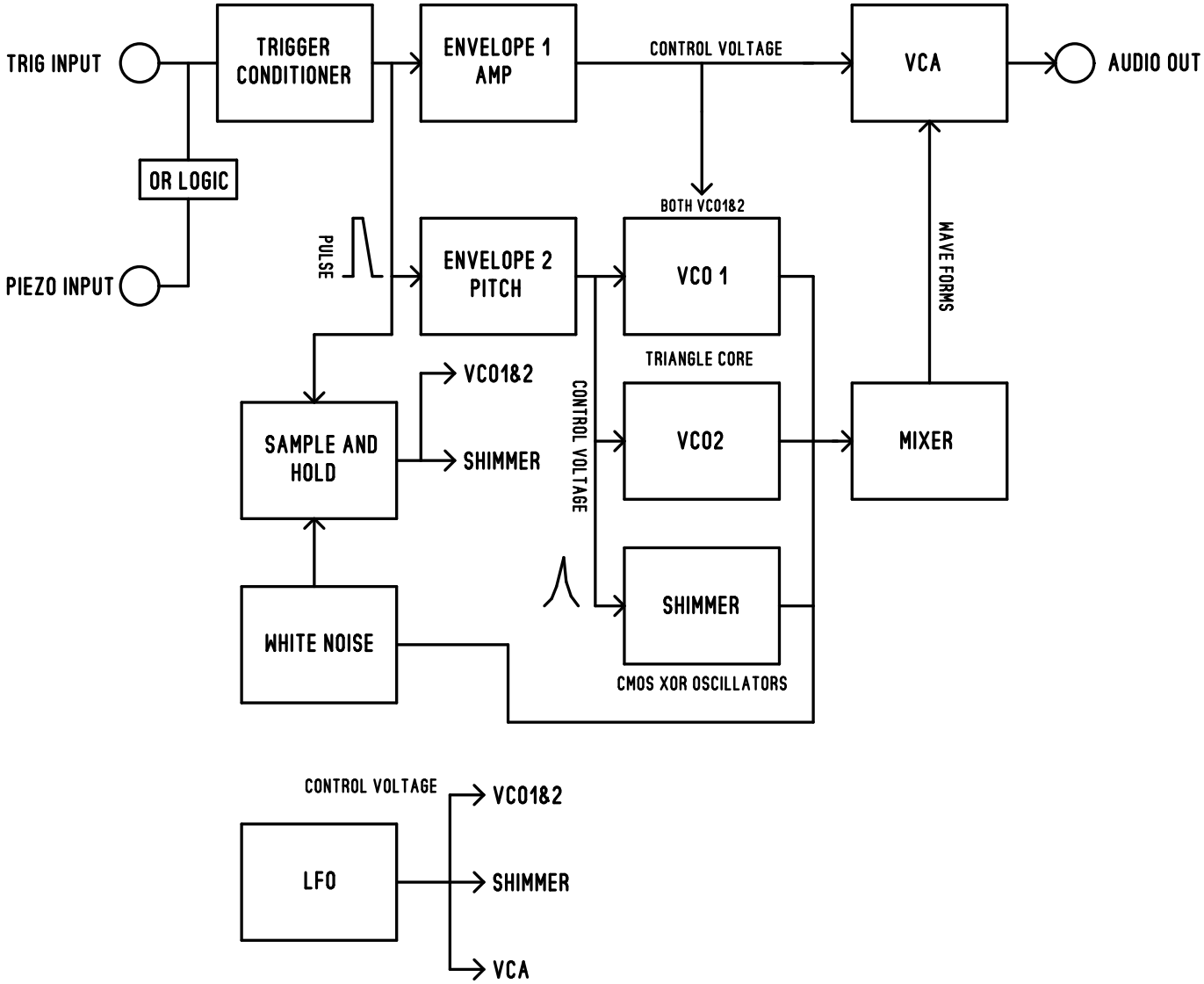
TRIG INPUT
TRIGGER CONDITIONER
ENVELOPE 1 AMP
CONTROL VOLTAGE
VCA
AUDIO OUT
OR LOGIC
PIEZO INPUT
PULSE
ENVELOPE 2 PITCH
BOTH VCO1&2
VCO 1
WAVE FORMS
TRIANGLE CORE
VCO1&2
CONTROL VOLTAGE
SAMPLE AND HOLD
SHIMMER
VCO2
MIXER
SHIMMER
WHITE NOISE
CMOS XOR OSCILLATORS
CONTROL VOLTAGE
VCO1&2
LFO
SHIMMER
VCA